**In accordance with ISO15552 standard**

## Compendium of SAI Series

**ISO15552 Standard cylinder**

Bore size: 32, 40, 50, 63, 80
100, 125, 160, 200

**Adjustable air buffer**

With adjustable air buffer on the front and back cover

**Without tie rod**

The 米-shaped aluminum pipe without tie rod has good corrosion esistance;

**With sensor switch groove**

With sensor switch groove on the two sides of body, the counterpart sensor switch type is: CMSE \ DMSE.

**Four kinds of cylinder joints**

I Knuckle Y Knuckle Floating Joint Universal Joint

**Multi-mounting accessories**

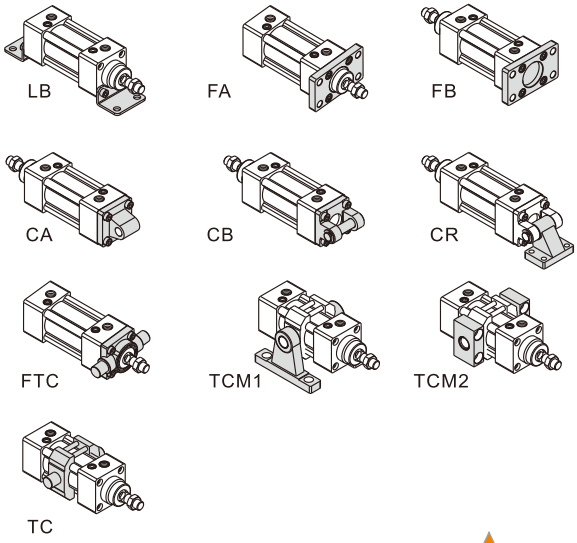


**Multi-type cylinder**

SAI: Double acting type SAID: Double rod type SAIJ: Adjustable stroke type

SAIL: Double acting with locker type

## Criteria for selection: Cylinder thrust

Unit: Newton(N)

| Bore size | Rod size | Acting type | | Pressure area(mm²) | Operating pressure(MPa) 0.1 | 0.2 | 0.3 | 0.4 | 0.5 | 0.6 | 0.7 | 0.8 | 0.9 |
|---|---|---|---|---|---|---|---|---|---|---|---|---|---|
| 32 | 12 | Double acting | Push side | 804 | 80.4 | 160.8 | 241.2 | 321.6 | 402.0 | 482.4 | 562.8 | 643.2 | 723.6 |
| | | | Pull side | 690 | 69.0 | 138.0 | 207.0 | 276.0 | 345.0 | 414.0 | 483.0 | 552.0 | 621.0 |
| 40 | 16 | Double acting | Push side | 1256 | 125.6 | 251.2 | 376.8 | 502.4 | 628.0 | 753.6 | 879.2 | 1002.4 | 1130.4 |
| | | | Pull side | 1055 | 105.5 | 211.0 | 316.5 | 422.0 | 527.5 | 633.0 | 738.5 | 844.0 | 949.5 |
| 50 | 20 | Double acting | Push side | 1963 | 196.3 | 392.6 | 588.9 | 785.2 | 981.5 | 1177.8 | 1374.1 | 1570.4 | 1766.7 |
| | | | Pull side | 1649 | 164.9 | 329.8 | 494.7 | 659.6 | 824.5 | 989.4 | 1154.3 | 1399.2 | 1484.1 |
| 63 | 20 | Double acting | Push side | 3117 | 311.7 | 623.4 | 935.1 | 1246.8 | 1558.5 | 1870.2 | 2181.9 | 2493.6 | 2805.3 |
| | | | Pull side | 2803 | 280.3 | 560.6 | 840.9 | 1121.2 | 1401.5 | 1681.8 | 1962.1 | 2242.4 | 2522.7 |
| 80 | 25 | Double acting | Push side | 5026 | 502.6 | 1005.2 | 1507.8 | 2010.4 | 2513.0 | 3015.6 | 3518.2 | 4020.8 | 4523.4 |
| | | | Pull side | 4536 | 453.6 | 907.2 | 1360.8 | 1814.4 | 2268.0 | 2721.6 | 3175.2 | 3628.8 | 4082.4 |
| 100 | 25 | Double acting | Push side | 7853 | 785.3 | 1570.6 | 2355.9 | 3141.2 | 3926.5 | 4711.8 | 4288.2 | 6282.4 | 7067.7 |
| | | | Pull side | 7362 | 736.2 | 1472.4 | 2208.6 | 2948.6 | 3681.0 | 4417.2 | 5153.4 | 5889.6 | 6625.8 |
| 125 | 32 | Double acting | Push side | 12272 | 1227.2 | 2454.4 | 3681.6 | 4908.8 | 6136.0 | 7363.2 | 8590.4 | 9817.6 | 11044.8 |
| | | | Pull side | 11468 | 1146.8 | 2293.6 | 3440.4 | 4587.2 | 5734.0 | 6880.8 | 8027.6 | 9174.4 | 10321.2 |
| 160 | 40 | Double acting | Push side | 20106 | 2010.6 | 4021.2 | 6031.8 | 8042.4 | 10053.0 | 12063.6 | 14074.2 | 16084.8 | 18095.4 |
| | | | Pull side | 18849 | 1884.9 | 3769.8 | 5654.7 | 7539.6 | 9424.5 | 11309.4 | 13194.3 | 15079.2 | 16964.1 |
| 200 | 40 | Double acting | Push side | 31416 | 3141.6 | 6283.2 | 9424.8 | 12566.4 | 15708.0 | 18849.6 | 21991.2 | 25132.8 | 28274.4 |
| | | | Pull side | 30157 | 3015.7 | 6031.4 | 9047.1 | 12062.8 | 15078.5 | 18094.2 | 21109.9 | 24125.6 | 27141.3 |

## Installation and application

1. When load changes in the work, the cylinder with abundant output capacity shall be selected.
2. Relative cylinder with high temperature resistance or corrosion resistance shall be chosen under the condition of high temperature or corrosion.
3. Necessary protection measure shall be taken in the environment with higher humidity, much dust or water drops, oil dust and welding dregs.
4. Dirty substances in the pipe must be eliminated before cylinder is connected with pipeline to prevent the entrance of particles into the cylinder.
5. The medium used by cylinder shall be filtered to 40 μ m or below.
6. Anti-freezing measure shall be adopted under low temperature environment to prevent moisture freezing.
7. The cylinder shall be carried out test run without load before application. Prior to run, buffer shall be turned to the minimum and gradually released to avoid the damage on cylinder caused by excessive impact.
8. The cylinder shall avoid the influence of side load in operation to maintain the normal work of cylinder and extend the service life.
9. If the cylinder is dismantled and stored for a long time, please conduct anti-rust treatment to the surface. Anti-dust caps shall be added in air inlet and outlet ports.

# ISO15552 Standard cylinder

## SAI Series

## Specification

| Bore size(mm) | | 32 | 40 | 50 | 63 | 80 | 100 | 125 | 160 | 200 |
|---|---|---|---|---|---|---|---|---|---|---|
| Acting type | | Double acting | | | | | | | | |
| Fluid | | Air(to be filtered by 40 μ m filter element) | | | | | | | | |
| Mounting type | SAI | Basic FA FB CA CB CR LB TC FTC TCM1 TCM2 | | | | | | | | |
| | SAID、SAIJ | Basic FA LB TC FTC TCM1 TCM2 | | | | | | | | |
| Operating pressure | | 0.15~1.0MPa(22~145psi)(1.5~10.0bar) | | | | | | | | |
| Proof pressure | | 1.5MPa(215psi)(15bar) | | | | | | | | |
| Temperature ℃ | | -20~70 | | | | | | | | |
| Speed range mm/s | | 30~800 | | | | | | 30~500 | | |
| Stroke tolerance | | 0~250 $^{+1.0}_{0}$ 251~1000 $^{+1.5}_{0}$ 1001~1500 $^{+2.0}_{0}$ | | | | | | | | |
| Cushion type | | Variable cushion | | | | | | | | |
| Adjustable cushion stroke | | 27 | | 30 | | 36 | | 40 | 50 | |
| Port size [Note1] | | 1/8" | 1/4" | | 3/8" | | 1/2" | | 3/4" | |

[Note1] PT thread, G thread and NPT thread are available.
Add) Refer to P337 for detail of sensor switch.

## Symbol

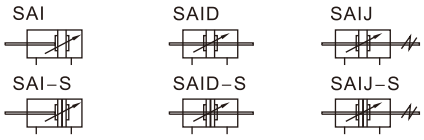


## Stroke

| Bore size (mm) | Standard stroke (mm) | Max.std stroke | Max. stroke |
|---|---|---|---|
| 32 | 25 50 75 80 100 125 150 160 175 200 250 300 350 400 450 500 | 1000 | 1800 |
| 40 | 25 50 75 80 100 125 150 160 175 200 250 300 350 400 450 500 600 700 800 | 1200 | 1800 |
| 50 | 25 50 75 80 100 125 150 160 175 200 250 300 350 400 450 500 600 700 800 900 1000 | 1200 | 1800 |
| 63 | 25 50 75 80 100 125 150 160 175 200 250 300 350 400 450 500 600 700 800 900 1000 | 1500 | 1800 |
| 80 | 25 50 75 80 100 125 150 160 175 200 250 300 350 400 450 500 600 700 800 900 1000 | 1500 | 1800 |
| 100 | 25 50 75 80 100 125 150 160 175 200 250 300 350 400 450 500 600 700 800 900 1000 | 1500 | 1800 |
| 125 | 25 50 75 80 100 125 150 160 175 200 250 300 350 400 450 500 600 700 800 900 1000 | 1500 | 1800 |
| 160 | 25 50 75 80 100 125 150 160 175 200 250 300 350 400 450 500 600 700 800 900 1000 | 1500 | 2000 |
| 200 | 25 50 75 80 100 125 150 160 175 200 250 300 350 400 450 500 600 700 800 900 1000 | 1500 | 2000 |

[Note] Consult us for non-standard stroke.

## Product feature

1. ISO15552 (original ISO6431) standard cylinder;
2. The piston seal is composed of two Y-shape one-way seal structure, which has compensation function, long service life and low start-up pressure;
3. The 米-shaped aluminum pipe without tie rod has good corrosion esistance. With sensor switch groove on the two sides of body;
4. The buffer adjustment of cylinder is smooth and steady;
5. Cylinders and accessories for installation with several specifications are optional.

## Ordering code

**SAI 160 □ × 50 S □ □ □**
**SAID160 □ × 50 S □ □ □**
**SAIJ 160 □ × 50-20 S □ □ □**

① ② ③ ④ ⑤ ⑥ ⑦ ⑧ ⑨

| ① Model | ② Bore size | ③ Rod Material | ④ Stroke | ⑤ Adjustable stroke | ⑥ Magnet | ⑦ Mounting type[Note1] | ⑧ Seals Material | ⑨ Thread type |
|---|---|---|---|---|---|---|---|---|
| SAI: Double acting type | 32<br>40<br>50<br>63<br>80<br>100<br>125<br>160<br>200 | Blank: Medium carbon steel<br>A: SUS420J2<br>B: SUS304 | Refer to stroke table for details | No this code | Blank: Without magnet<br>S: With magnet | Blank<br>LB<br>FA<br>FB<br>CA<br>CB<br>CR<br>FTC<br>TC | Blank: TPU<br>H: Viton<br>N: NBR | Blank: PT<br>G: G<br>T: NPT |
| SAID: Double rod type | | | | | | Blank<br>LB<br>FA<br>FTC<br>TC | | |
| SAIJ: Adjustable stroke type | | | | 10<br>20<br>30<br>40<br>50<br>75<br>100 | | | | |

[Note1] CR is used with CB; FTC、TC are used with TCM1、TCM2.

### Inner structure and material of major parts

SAI

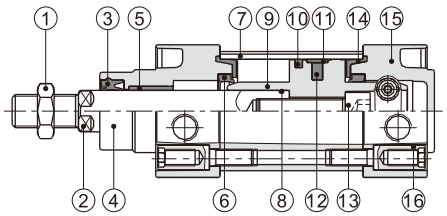


| NO. | Item | Material |
|---|---|---|
| 1 | Rod nut | Carbon steel\Stainless steel |
| 2 | Piston rod | Carbon steel with 20μm chrome plated or Stainless steel |
| 3 | Front cover packing | TPU |
| 4 | Front cover | Aluminum alloy |
| 5 | Bushing | Wear resistant material |
| 6 | Cushing O-ring | TPU |
| 7 | Barrel | Aluminum alloy |
| 8 | O-ring | NBR |
| 9 | Piston | Aluminum alloy |
| 10 | Piston Seal | TPU |
| 11 | Wear ring | Wear resistant material |
| 12 | Magnet | Plastic(Φ100 and below)\Rubber(Others) |
| 13 | Bolt | Carbon steel |
| 14 | Buffer gasket | TPU |
| 15 | Back cover | Aluminum alloy |
| 16 | Screw | Carbon steel\Stainless steel |

### Dimensions

SAI

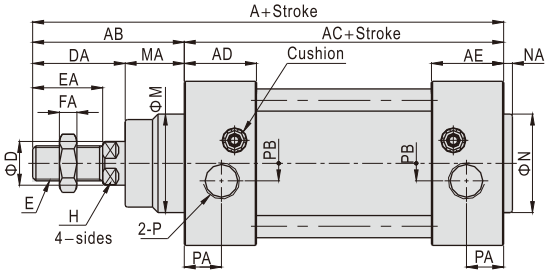


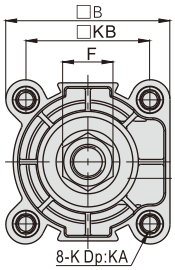


| Bore size\Item | A | AB | AC | AD | AE | B | D | DA | E | EA | F | FA | M | MA | H | K(Without TC) | K(WithTC) | KA(Without TC) | KA(WithTC) | KB | N | NA | P | PA | PB |
|---|---|---|---|---|---|---|---|---|---|---|---|---|---|---|---|---|---|---|---|---|---|---|---|---|---|
| 32 | 142 | 48 | 94 | 27.5 | 27.5 | 47 | 12 | 29 | M10×1.25 | 22 | 17 | 6 | 30 | 19 | 10 | M6 | M5 | 16 | 14 | 32.5 | 30 | 3 | 1/8" | 13 | 5.5 |
| 40 | 159 | 54 | 105 | 32 | 32 | 53 | 16 | 33 | M12×1.25 | 24 | 17 | 7 | 35 | 21 | 13 | M6 | M5 | 16 | 16 | 38 | 35 | 3.5 | 1/4" | 17 | 6 |
| 50 | 175 | 69 | 106 | 31 | 31 | 65 | 20 | 42 | M16×1.5 | 32 | 23 | 8 | 40 | 27 | 17 | M8 | M6 | 16 | 16 | 46.5 | 40 | 3.5 | 1/4" | 15.5 | 7.5 |
| 63 | 190 | 69 | 121 | 33 | 33 | 75 | 20 | 42 | M16×1.5 | 32 | 23 | 8 | 45 | 27 | 17 | M8 | M6 | 16 | 16 | 56.5 | 45 | 4 | 3/8" | 16.5 | 7.5 |
| 80 | 214 | 86 | 128 | 33 | 33 | 95 | 25 | 53 | M20×1.5 | 40 | 26 | 10 | 45 | 33 | 22 | M10 | M8 | 17 | 16 | 72 | 45 | 4 | 3/8" | 16.5 | 9 |
| 100 | 229 | 91 | 138 | 37 | 37 | 115 | 25 | 55 | M20×1.5 | 40 | 26 | 10 | 55 | 36 | 22 | M10 | M8 | 17 | 16 | 89 | 55 | 4 | 1/2" | 18.5 | 9.5 |
| 125 | 279 | 119 | 160 | 46 | 46 | 140 | 32 | 74 | M27×2.0 | 54 | 41 | 13.5 | 60 | 45 | 27 | M12 | M12 | 20 | 20 | 110 | 60 | 4 | 1/2" | 23 | 14 |
| 160 | 332 | 152 | 180 | 50 | 50 | 180 | 40 | 94 | M36×2.0 | 72 | 55 | 18 | 65 | 58 | 36 | M16 | M16 | 24 | 24 | 140 | 65 | 4 | 3/4" | 25 | 15 |
| 200 | 347 | 167 | 180 | 50 | 50 | 220 | 40 | 100 | M36×2.0 | 72 | 55 | 18 | 75 | 67 | 36 | M16 | M16 | 24 | 24 | 175 | 75 | 5 | 3/4" | 25 | 15 |

Remark: The dimensions of magnet type cylinder are the same as non-magnet type cylinder.

SAID

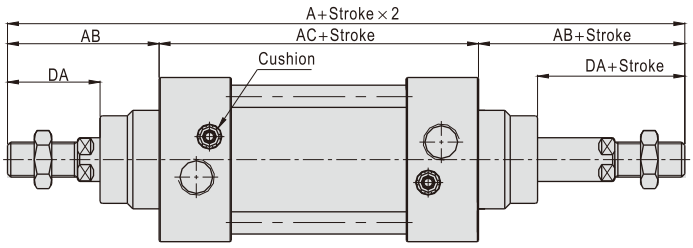


SAIJ

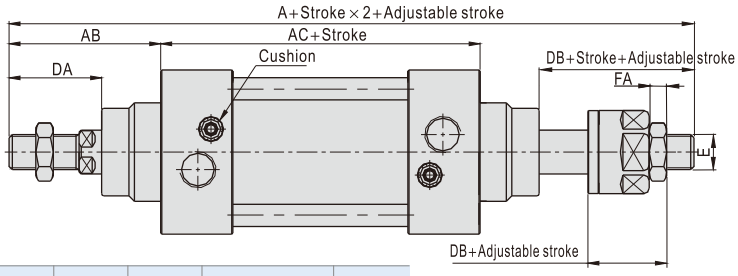


| Bore size\Item | A | | AB | AC | DA | DB | E | FA |
|---|---|---|---|---|---|---|---|---|
| Model | SAID | SAIJ | | | | | | |
| 32 | 190 | 188 | 48 | 94 | 29 | 27 | M10X1.25 | 6 |
| 40 | 213 | 208 | 54 | 105 | 33 | 28 | M12X1.25 | 7 |
| 50 | 244 | 231 | 69 | 106 | 42 | 29 | M16X1.5 | 8 |
| 63 | 259 | 246 | 69 | 121 | 42 | 29 | M16X1.5 | 8 |
| 80 | 300 | 282.5 | 86 | 128 | 53 | 35.5 | M20X1.5 | 10 |
| 100 | 320 | 300.5 | 91 | 138 | 55 | 35.5 | M20X1.5 | 10 |
| 125 | 398 | 366.5 | 119 | 160 | 74 | 42.5 | M27X2.0 | 13.5 |
| 160 | 484 | 458 | 152 | 180 | 94 | 68 | M36X2.0 | 18 |
| 200 | 514 | 482 | 167 | 180 | 100 | 68 | M36X2.0 | 18 |

Remark:
1. The dimensions of magnet type cylinder are the same as non-magnet type cylinder.
2. The unmarked dimension is the same as SAI standard type.

# ISO15552 Standard cylinder

## SAIL Series——With locker type

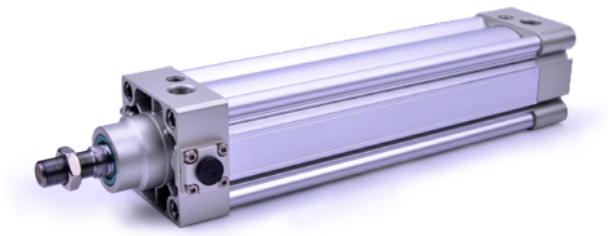

## Symbol

## Product feature

1. With lock cylinder: front cover with lock type and rear cover lock type;
2. The way of unlocking: automatic and manual.

## Specification

| Bore size(mm) | | 40 | 50 | 63 | 80 | 100 | 125 | 160 | 200 |
|---|---|---|---|---|---|---|---|---|---|
| Acting type | | Double acting | | | | | | | |
| Fluid | | Air(to be filtered by 40 μ m filter element) | | | | | | | |
| Mounting type | | Basic FA FB CA CB CR LB TC FTC TCM1 TCM2 | | | | | | | |
| Operating pressure | | 0.15~1.0MPa(22~145psi)(1.5~10.0bar) | | | | | | | |
| Proof pressure | | 1.5MPa(215psi)(15bar) | | | | | | | |
| Temperature ℃ | | -20~70 | | | | | | | |
| Speed range mm/s | | 30~800 | | | | | 30~500 | | |
| Stroke tolerance | | $0\sim250^{+1.0}_{0}$ $251\sim1000^{+1.5}_{0}$ $1001\sim1500^{+2.0}_{0}$ | | | | | | | |
| Cushion type | | Variable cushion | | | | | | | |
| Adjustable cushion stroke | No locker end | 27 | 30 | | 36 | | 40 | 50 | |
| | With locker end | 15 | 13.5 | 16 | 19.5 | 20 | 23 | 27 | |
| Port size [Note1] | | 1/4" | | 3/8" | | 1/2" | | 3/4" | |

[Note1] PT thread, G thread and NPT thread are available.
Add) Refer to P337 for detail of sensor switch.

## Stroke

| Bore size (mm) | Standard stroke (mm) | Max.std stroke | Max. stroke |
|---|---|---|---|
| 40 | 25 50 75 80 100 125 150 160 175 200 250 300 350 400 450 500 600 700 800 | 1200 | 1800 |
| 50 | 25 50 75 80 100 125 150 160 175 200 250 300 350 400 450 500 600 700 800 900 1000 | 1200 | 1800 |
| 63 | 25 50 75 80 100 125 150 160 175 200 250 300 350 400 450 500 600 700 800 900 1000 | 1500 | 1800 |
| 80 | 25 50 75 80 100 125 150 160 175 200 250 300 350 400 450 500 600 700 800 900 1000 | 1500 | 1800 |
| 100 | 25 50 75 80 100 125 150 160 175 200 250 300 350 400 450 500 600 700 800 900 1000 | 1500 | 1800 |
| 125 | 25 50 75 80 100 125 150 160 175 200 250 300 350 400 450 500 600 700 800 900 1000 | 1500 | 1800 |
| 160 | 25 50 75 80 100 125 150 160 175 200 250 300 350 400 450 500 600 700 800 900 1000 | 1500 | 2000 |
| 200 | 25 50 75 80 100 125 150 160 175 200 250 300 350 400 450 500 600 700 800 900 1000 | 1500 | 2000 |

[Note] Consult us for non-standard stroke.

## Ordering code

**SAIL B 160 × 50 S □ □**

① ② ③ ④ ⑤ ⑥ ⑦

| ①Model | ②Locker position | ③Bore size | ④Stroke | ⑤磁石代號 | ⑥Mounting type[Note1] | | ⑦Thread type |
|---|---|---|---|---|---|---|---|
| SAIL: Double acting type (with locker) | B: Back cover with locker<br>F: Front cover with locker | 40<br>50<br>63<br>80<br>100<br>125<br>160<br>200 | Refer to stroke table for details | Blank: Without magnet<br>S: With magnet | Blank | 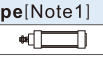 | Blank: PT<br>G: G<br>T: NPT |
| | | | | | LB | 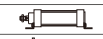 | |
| | | | | | FA | 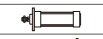 | |
| | | | | | FB | | |
| | | | | | CA | 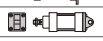 | |
| | | | | | CB | 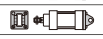 | |
| | | | | | CR | 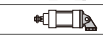 | |
| | | | | | FTC | 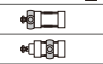 | |
| | | | | | TC |  | |

[Note1] CR is used with CB；FTC、TC are used with TCM1、TCM2.

## Inner structure and material of major parts

**SAILB-S**

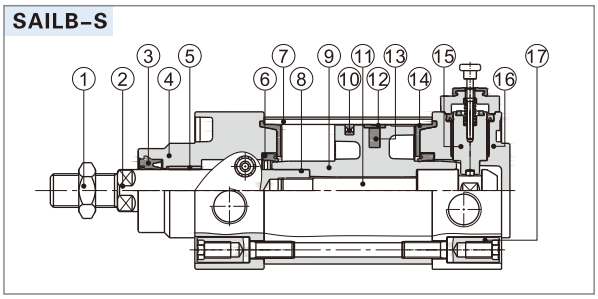


| NO. | Item | Material | NO. | Item | Material |
|---|---|---|---|---|---|
| 1 | Rod nut | Carbon steel | 9 | Piston | Aluminum alloy |
| 2 | Piston rod | Carbon steel with 20μm chrome plated | 10 | Piston Seal | BNR |
| | | | 11 | Pluger | S45C |
| 3 | Front cover packing | TPU | 12 | Wear ring | Wear resistant material |
| 4 | Front cover | Aluminum alloy | 13 | Magnet | Plastic |
| 5 | Bushing | Wear resistant material | 14 | Buffer gasket | TPU |
| 6 | Cushing O-ring | TPU | 15 | Locker | |
| 7 | Barrel | Aluminum alloy | 16 | Back cover | Aluminum alloy |
| 8 | O-ring | NBR | 17 | Screw | Carbon steel |

## Dimensions

### SAILF

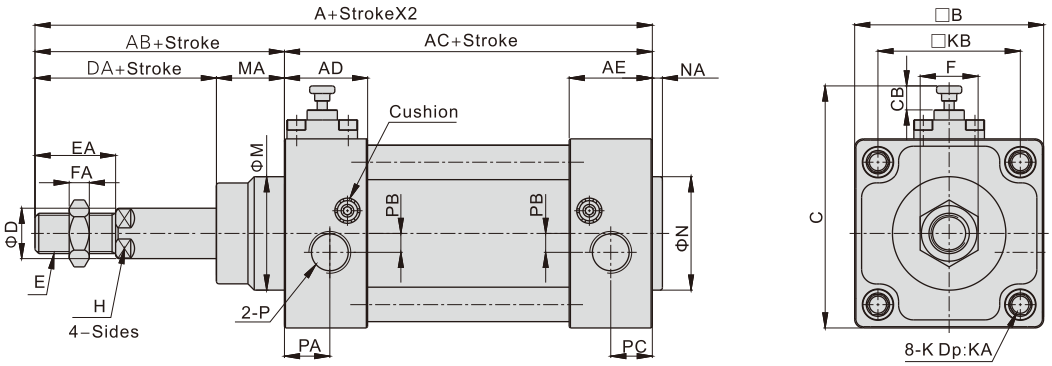


### SAILB

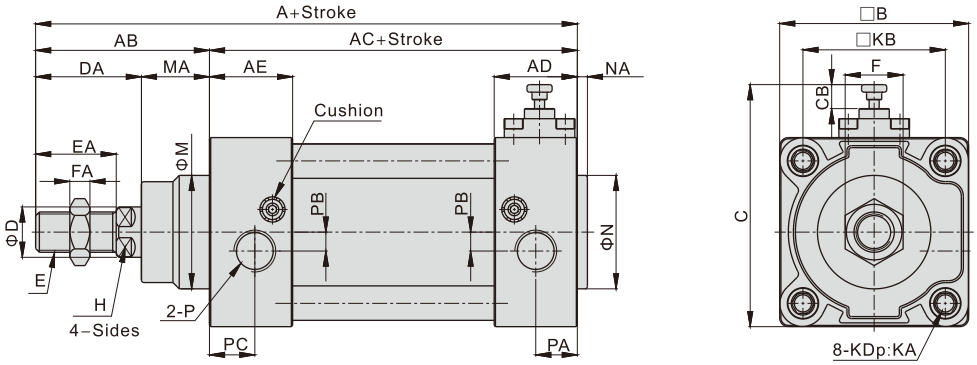


| Bore size\Item | A | AB | AC | AD | AE | B | C | CB | D | DA | E | EA | F | FA | H | M | MA | K | KA | KB | N | NA | P | PA | PB | PC |
|---|---|---|---|---|---|---|---|---|---|---|---|---|---|---|---|---|---|---|---|---|---|---|---|---|---|---|
| 40 | 159 | 54 | 105 | 32 | 32 | 53 | 74 | 10 | 16 | 32 | M12×1.25 | 24 | 17 | 7 | 13 | 35 | 22 | M6 | 16.5 | 38 | 35 | 3.5 | 1/4" | 18 | 6 | 16 |
| 50 | 175 | 69 | 106 | 31 | 31 | 65 | 86 | 10 | 20 | 42 | M16×1.5 | 32 | 23 | 8 | 17 | 40 | 27 | M8 | 16.5 | 46.5 | 40 | 3.5 | 1/4" | 18.5 | 8.5 | 15.5 |
| 63 | 190 | 69 | 121 | 33 | 33 | 75 | 96 | 8 | 20 | 40 | M16×1.5 | 32 | 23 | 8 | 17 | 45 | 29 | M8 | 16.5 | 56.5 | 45 | 4 | 3/8" | 18 | 7.5 | 16.5 |
| 80 | 220 | 86 | 134 | 39 | 33 | 95 | 117 | 8 | 25 | 53 | M20×1.5 | 40 | 26 | 10 | 22 | 45 | 33 | M10 | 18.5 | 72 | 45 | 4 | 3/8" | 22.5 | 11 | 16.5 |
| 100 | 231 | 91 | 140 | 39 | 37 | 115 | 137 | 8 | 25 | 55 | M20×1.5 | 40 | 26 | 10 | 22 | 55 | 36 | M10 | 18.5 | 89 | 55 | 4 | 1/2" | 22.5 | 13.5 | 18.5 |
| 125 | 279 | 119 | 160 | 46 | 46 | 140 | 172.5 | 18.5 | 32 | 74 | M27×2.0 | 54 | 41 | 13.5 | 27 | 60 | 45 | M12 | 21.5 | 110 | 60 | 4 | 1/2" | 23 | 14 | 23 |
| 160 | 332 | 152 | 180 | 50 | 50 | 180 | 212.5 | 18.5 | 40 | 94 | M36×2.0 | 72 | 55 | 18 | 36 | 65 | 58 | M16 | 30 | 140 | 65 | 4 | 3/4" | 25 | 15 | 25 |
| 200 | 347 | 167 | 180 | 50 | 50 | 220 | 252.5 | 18.5 | 40 | 100 | M36×2.0 | 72 | 55 | 18 | 36 | 75 | 67 | M16 | 30 | 175 | 75 | 5 | 3/4" | 25 | 15 | 25 |

Remark: The dimensions of magnet type cylinder are the same as non-magnet type cylinder.

## Use and maintenance

1. Under the condition of locking, there is a great danger to the gas port A when there is no pressure on both sides of the air port. There is a great danger similar to the release of locking, or the sudden release of lock and the piston rod flying. When the locking mechanism is lifted, it is necessary to supply the pressure of the air inlet B and remove the lock mechanism without load.
2. If the fast exhaust valve is used to speed down the drop speed, the cylinder noumenon is sometimes started than the lock pin first and can not be removed normally. Therefore, please do not use the fast exhaust valve with the lock cylinder.
3. Please do not use three solenoid valves: please do not combine with three (especially the seal type metal seal) solenoid valve. If pressure is sealed in the air inlet with the locking mechanism side, the lock will not work. In addition, even if it is temporarily locked, the air leaked from the solenoid valve will enter the cylinder, and the lock will be lifted after a period of time.
4. If the locking mechanism side bears the back pressure, sometimes the lock will be lifted, so please use a single or integrated individual exhaust type solenoid valve.
5. If the cylinder with adjustable cushioning is excessive, if the air cushion valve needle on the locking mechanism side is screwed too much, the piston will sometimes cause restraint at the stroke terminal, causing the damage of the locking mechanism. Therefore, the needle valve should be adjusted to make the piston not be restrained.
6. When the manual operation of the locking mechanism is completed, it is necessary to reset the manual device to the in situ. In addition, please do not do manual operation outside the adjustment, otherwise it will be more dangerous.
7. When the cylinder is installed and adjusted, please dissolve the lock: in the lock state of the installation and other perations, sometimes it causes the lock-in parts to be damaged.
8. Please do not use multiple cylinders at the same time: please do not use more than 2 locking cylinders at the same time to drive a workpiece. Sometimes one of the cylinders will not be locked out.
9. Please use the speed control valve in the exhaust throttle control state: in the intake throttling control, it is sometimes impossible to release the lock.
10. In the lock side, please be sure to use the terminal of the cylinder stroke: if the piston of the cylinder does not reach the terminal, locking will fail or lock.
11. Manual operation is a non locking way to release: pull the lever into the anti falling piston, and pull the bolt out of the 4mm with the force of more than 20N. After the piston is moved away, it can release the lock. (no load level installation or opposite side port pressurization), or after loosened, the anti falling piston returns to the original position through the action of the stop spring and enters the piston rod groove, and the piston becomes locked.

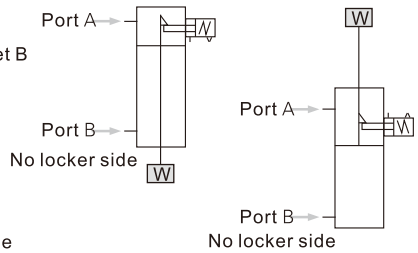


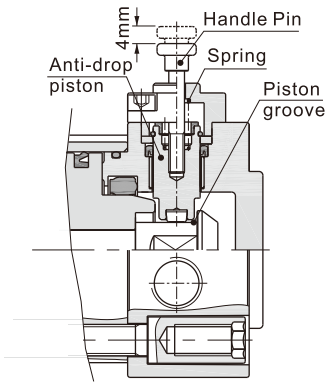

## Compendium of BSAI Series

### Spring and gripper patch enclasp equipment

Simplicity structure
Celerity and availability locked or unlocked
State switch steadily

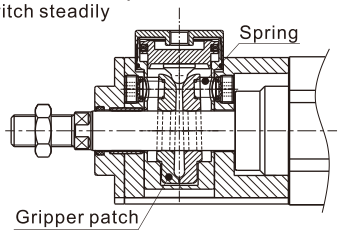


### Multi-kinds unlocked mode

Air pressure unlocked mode and manual unlocked mode are available

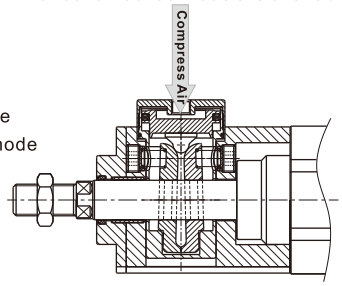


Air pressure unlocked mode

Manual unlocked screw

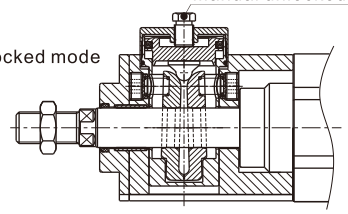

Manual unlocked mode

### Multi-type cylinder and bore size

BSAI, BSAID type available
Bore size: 32, 40, 50, 63, 80, 100, 125

### Bidirectional lock

Can be locked no matter piston shoot out or draw back

### Compact enclasp equipment

Compact enclasp equipment to save space

### The body is the same as SAI series

The body is SAI series standard cylinder's body for mounting expediently.
The mounting accessories and the sensor switch are the same as SE series cylinder.

## How to mount and use

1. The locker equipment only be locked after cylinder stopped, can't brake the piston rod while it is moving. If the lock cylinder be used for control system with safety demand, other safety measure is required.
2. The locker equipment only be unlocked when the air pressure on both sides of piston rod are equation or the cylinder stopped, otherwise piston rod movies abruptly might produce accident.
3. Typical applications

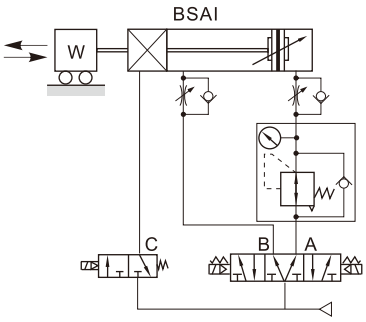


Horizontal mounted

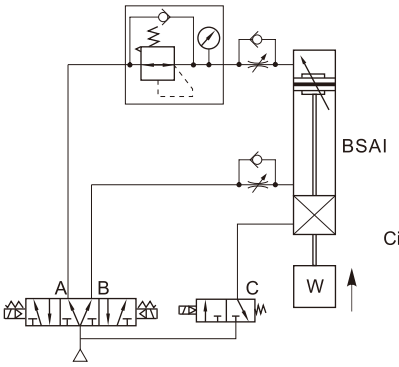


Vertical mounted

Acting type

| Yes or No inlet | | | State of acting | |
|---|---|---|---|---|
| A Port | B Port | C Port | | |
| Yes | No | Yes | Advance | |
| Yes | Yes | No | Locked | Over 0.5S |
| Yes | Yes | Yes | unlocked | 0~0.5S |
| Yes | No | Yes | Advance to rod protruded completely | |
| No | Yes | Yes | Back | |
| Yes | Yes | No | Locked | Over 0.5S |
| Yes | Yes | Yes | unlocked | 0~0.5S |
| No | Yes | Yes | back to rod retracted completely | |

Circle

# ISO15552 Standard cylinder

## BSAI Series——Enclasp type

## Specification

| Bore size(mm) | | 32 | 40 | 50 | 63 | 80 | 100 | 125 |
|---|---|---|---|---|---|---|---|---|
| Acting type | | Double acting | | | | | | |
| Fluid | | Air(to be filtered by 40μm filter element) | | | | | | |
| Mounting type | BSAI | Basic FA FB CA CB CR LB TC TCM1 TCM2 | | | | | | |
| | BSAID | Basic FA LB TC TCM1 TCM2 | | | | | | |
| Operating pressure | | 0.15~0.7MPa(22~100psi)(1.5~7.0bar) | | | | | | |
| Proof pressure | | 1.5MPa(215psi)(15bar) | | | | | | |
| Temperature ℃ | | -20~70 | | | | | | |
| Speed range mm/s | | 30~800 | | | | | | 30~500 |
| Stroke tolerance | | $0\sim250\ ^{+1.0}_{0}$ $251\sim1000^{+1.5}_{0}$ $1001\sim1500^{+2.0}_{0}$ | | | | | | |
| Cushion type | | Variable cushion | | | | | | |
| Adjustable cushion stroke | | 27 | | 30 | | 36 | | 40 |
| Port size [Note1] | Cylinder | 1/8" | 1/4" | | 3/8" | | 1/2" | |
| | Enclasp equipment | G1/8 | | | | | | |
| Unlocked Pressure | | 0.3~0.7MPa(45~100psi)(3~7bar) | | | | | | |
| Static holding force (N) | | 600 | 900 | 1400 | 2200 | 3600 | 5500 | 8600 |

[Note1] PT thread, G thread and NPT thread are available.
Add) Refer to P337 for detail of sensor switch.

## Symbol

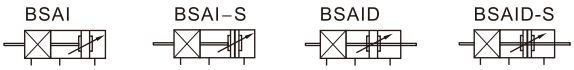


## Product feature

1. Belong to SAI series standard cylinder add lock structure.
2. Can be locked at random positions in stroke scope.
3. Reasonable lock structure, the lock state no relation with the direction of piston moving.

## Stroke

| Bore size (mm) | Standard stroke (mm) | Max.std stroke | Max. stroke |
|---|---|---|---|
| 32 | 25 50 75 80 100 125 150 160 175 200 250 300 350 400 450 500 | 1000 | 1800 |
| 40 | 25 50 75 80 100 125 150 160 175 200 250 300 350 400 450 500 600 700 800 | 1200 | 1800 |
| 50 | 25 50 75 80 100 125 150 160 175 200 250 300 350 400 450 500 600 700 800 900 1000 | 1200 | 1800 |
| 63 | 25 50 75 80 100 125 150 160 175 200 250 300 350 400 450 500 600 700 800 900 1000 | 1500 | 1800 |
| 80 | 25 50 75 80 100 125 150 160 175 200 250 300 350 400 450 500 600 700 800 900 1000 | 1500 | 1800 |
| 100 | 25 50 75 80 100 125 150 160 175 200 250 300 350 400 450 500 600 700 800 900 1000 | 1500 | 1800 |
| 125 | 25 50 75 80 100 125 150 160 175 200 250 300 350 400 450 500 600 700 800 900 1000 | 1500 | 1800 |

[Note] Consult us for non-standard stroke.

## Ordering code

B SAI 80X50 S □ □

B SAID 80X50 S □ □

1 2 3 4 5 6 7

| | | | | |
|---|---|---|---|---|
| ①Type | B: Enclasp cylinder | | | |
| ②Model | SAI：Double acting type | | SAID：Double rod type | |
| ③Bore size | 32 40 50 63 80 100 125 | | | |
| ④Stroke | Refer to stroke table for details | | | |
| ⑤Magnet | Blank: Without magnet | | S: With magnet | |
| ⑥Mounting type [Note1] | Blank | LB | Blank | LB |
| | FA | FB | FA | TC |
| | CA | CB | | |
| | CR | TC | | |
| ⑦Thread type | Blank: PT1/4 G: G1/4 T: NPT1/4 | | | |

[Note1] CR is used with CB；TC are used with TCM1、TCM2.

## Inner structure and material of major parts

BSAI

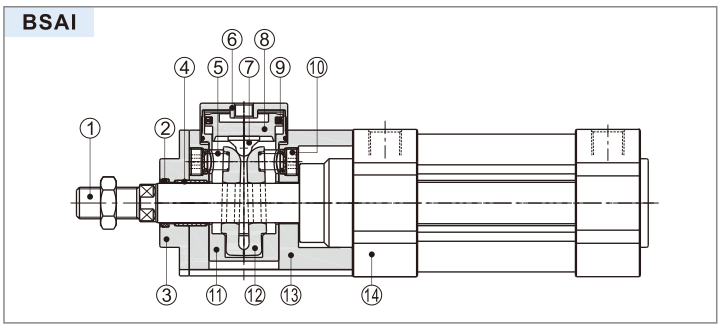


| NO. | Item | Material |
|---|---|---|
| 1 | Piston rod | Carbon steel with 20 μ m chrome plated or Stainless steel |
| 2 | Packing | Plastic |
| 3 | Packing holder | Aluminum alloy |
| 4 | Bearing | Carbon steel+Bronze sinter |
| 5 | Spring | Spring steel |
| 6 | Cover | Aluminum alloy |
| 7 | Unlocked header | Wear resistant material |
| 8 | Unlocked piston | Aluminum alloy |
| 9 | Piston O-ring | NBR |
| 10 | Screw | Carbon steel |
| 11 | Sleeve | Aluminum alloy |
| 12 | Clamp header | Aluminium bronze |
| 13 | Fixed holder | Aluminum alloy |
| 14 | SAI series cylinder | – |

## Dimensions

BSAI

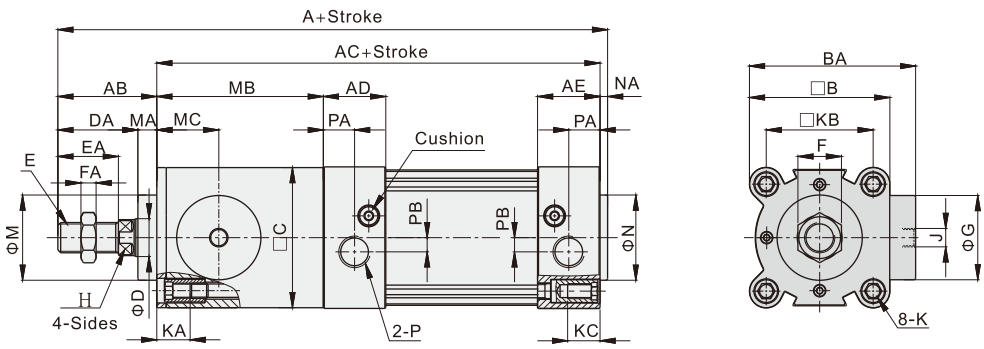


| Bore size\Item | A | AB | AC | AD | AE | B | BA | C | D | DA | E | EA | F | FA | G | H | J | K | KA | KB | KC | M | MA | MB | MC | P | PA | PB | N | NA |
|---|---|---|---|---|---|---|---|---|---|---|---|---|---|---|---|---|---|---|---|---|---|---|---|---|---|---|---|---|---|---|
| 32 | 201 | 39 | 159 | 27.5 | 27.5 | 47 | 65 | 46.5 | 12 | 29 | M10×1.25 | 22 | 17 | 6 | 30 | 10 | G1/8 | M6X1.0 | 14.5 | 32.5 | 16 | 20 | 10 | 65 | 25 | 1/8" | 13.5 | 6 | 30 | 3 |
| 40 | 222.5 | 43 | 176 | 32 | 32 | 53 | 72 | 52.5 | 16 | 33 | M12×1.25 | 24 | 17 | 7 | 28.5 | 13 | G1/8 | M6X1.0 | 14.5 | 38 | 16 | 35 | 10 | 71 | 27.5 | 1/4" | 17.5 | 6 | 35 | 3.5 |
| 50 | 249.5 | 52 | 194 | 31 | 31 | 65 | 83 | 64 | 20 | 42 | M16×1.5 | 32 | 23 | 8 | 35.5 | 17 | G1/8 | M8X1.25 | 16 | 46.5 | 16 | 40 | 10 | 88 | 33 | 1/4" | 14 | 8 | 40 | 3.5 |
| 63 | 265 | 52 | 209 | 33 | 33 | 75 | 88 | 74 | 20 | 42 | M16×1.5 | 32 | 23 | 8 | 44.5 | 17 | G1/8 | M8X1.25 | 16 | 56.5 | 16 | 45 | 10 | 88 | 33 | 3/8" | 17 | 8 | 45 | 4 |
| 80 | 321 | 68 | 249 | 33 | 33 | 95 | 107 | 94 | 25 | 53 | M20×1.5 | 40 | 26 | 10 | 55.5 | 22 | G1/8 | M10X1.5 | 17 | 72 | 17 | 45 | 15 | 121 | 47 | 3/8" | 16.5 | 8 | 45 | 4 |
| 100 | 336 | 70 | 262 | 37 | 37 | 115 | 117.5 | 113.5 | 25 | 55 | M20×1.5 | 40 | 26 | 10 | 55.5 | 22 | G1/8 | M10X1.5 | 17 | 89 | 17 | 55 | 15 | 124 | 47 | 1/2" | 19.5 | 10 | 55 | 4 |
| 125 | 401 | 92 | 305 | 46 | 46 | 140 | 152 | 138 | 32 | 74 | M27×2 | 54 | 41 | 13.5 | 70 | 27 | G1/8 | M12X1.75 | 20 | 110 | 20 | 60 | 18 | 145 | 63 | 1/2" | 23 | 11 | 60 | 4 |

Remark: The dimensions of magnet type cylinder are the same as non-magnet type cylinder.

BSAID

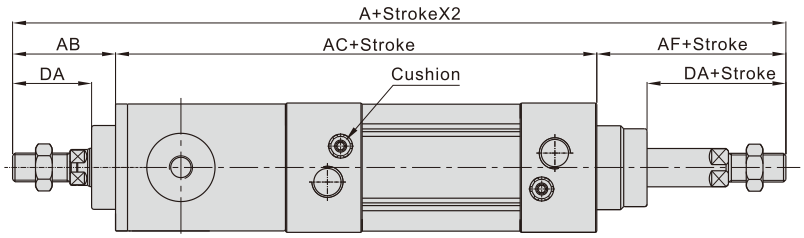


| Bore size\Item | A | AB | AC | AF | DA | E | FA |
|---|---|---|---|---|---|---|---|
| 32 | 246 | 39 | 159 | 48 | 29 | M10×1.25 | 6 |
| 40 | 273 | 43 | 176 | 54 | 33 | M12×1.25 | 7 |
| 50 | 315 | 52 | 194 | 69 | 42 | M16×1.5 | 8 |
| 63 | 330 | 52 | 209 | 69 | 42 | M16×1.5 | 8 |
| 80 | 403 | 68 | 249 | 86 | 53 | M20×1.5 | 10 |
| 100 | 423 | 70 | 262 | 91 | 55 | M20×1.5 | 10 |
| 125 | 516 | 92 | 305 | 119 | 74 | M27×2 | 13.5 |

Remark:
1. The dimensions of magnet type cylinder are the same as non-magnet type cylinder.
2. The unmarked dimension is the same as BSAI standard type.

## List for ordering code of accessories

| Accessories / Bore size | Mounting accessories | | | | | | | | |
|---|---|---|---|---|---|---|---|---|---|
| | LB | FA/FB | CA | CB | CR | TC | FTC | TCM1 | TCM2 |
| 32 | F-SI32LB | F-SI32FA | F-SE32CA | F-SE32CB | F-SI32CR | F-SAI32TC | F-SI32FTC | F-SI32TCM1 | F-SI32TCM2 |
| 40 | F-SI40LB | F-SI40FA | F-SE40CA | F-SE40CB | F-SI40CR | F-SAI40TC | F-SI40FTC | F-SI40TCM1 | F-SI40TCM2 |
| 50 | F-SI50LB | F-SI50FA | F-SE50CA | F-SE50CB | F-SI50CR | F-SAI50TC | F-SI50FTC | F-SI40TCM1 | F-SI40TCM2 |
| 63 | F-SI63LB | F-SI63FA | F-SE63CA | F-SE63CB | F-SI63CR | F-SAI63TC | F-SI63FTC | F-SI63TCM1 | F-SI63TCM2 |
| 80 | F-SI80LB | F-SI80FA | F-SE80CA | F-SE80CB | F-SI80CR | F-SAI80TC | F-SI80FTC | F-SI63TCM1 | F-SI63TCM2 |
| 100 | F-SI100LB | F-SI100FA | F-SE100CA | F-SE100CB | F-SI100CR | F-SAI100TC | F-SI100FTC | F-SI125TCM1 | F-SI125TCM2 |
| 125 | F-SI125LB | F-SI125FA | F-SE125CA | F-SE125CB | F-SI125CR | F-SAI125TC | F-SI125FTC | F-SI125TCM1 | F-SI125TCM2 |
| 160 | F-SI160LB | F-SI160FA | F-SI160CA | F-SI160CB | F-SI160CR | F-SI160TC | F-SI160FTC | F-SI160TCM1 | F-SI160TCM2 |
| 200 | F-SI200LB | F-SI200FA | F-SI200CA | F-SI200CB | F-SI200CR | F-SI200TC | F-SI200FTC | F-SI200TCM1 | F-SI160TCM2 |

| Accessories / Bore size | Knuckle | | | | Sensor switch | |
|---|---|---|---|---|---|---|
| | I | Y | F | U | CMSE | DMSE |
| 32 | F-M10X125I | F-M10X125Y | F-M10X125F | F-M10X125U | CMSE | DMSE |
| 40 | F-M12X125I | F-M12X125Y | F-M12X125F | F-M12X125U | | |
| 50 | F-M16X150I | F-M16X150Y | F-M16X150F | F-M16X150U | | |
| 63 | F-M16X150I | F-M16X150Y | F-M16X150F | F-M16X150U | | |
| 80 | F-M20X150I | F-M20X150Y | F-M20X150F | F-M20X150U | | |
| 100 | F-M20X150I | F-M20X150Y | F-M20X150F | F-M20X150U | | |
| 125 | F-M27X200I | F-M27X200Y | F-M27X200F | F-M27X200U | | |
| 160 | F-M36X200I | F-M36X200Y | F-M36X200F | F-M36X200U | | |
| 200 | F-M36X200I | F-M36X200Y | F-M36X200F | F-M36X200U | | |

## Accessory selection

| Accessories / Cylinder model | | Mounting accessories | | | | | | | | | | Knuckle [Note1] | | | | Sensor switch | |
|---|---|---|---|---|---|---|---|---|---|---|---|---|---|---|---|---|---|
| | | LB | FA | FB | CA | CB | CR | TC | FTC | TCM1 | TCM2 | I | Y | U | F | CMSE | DMSE |
| SAI | Standard | ● | ● | ● | ● | ● | ● | ● | ● | ● | ● | ● | ● | ● | ● | × | × |
| | With magnet | ● | ● | ● | ● | ● | ● | ● | ● | ● | ● | ● | ● | ● | ● | ● | ● |
| BSAI | Standard | ● | ● | ● | ● | ● | ● | ● | × | ● | ● | ● | ● | ● | ● | × | × |
| | With magnet | ● | ● | ● | ● | ● | ● | ● | × | ● | ● | ● | ● | ● | ● | ● | ● |
| SAID | Standard | ● | ● | × | × | × | × | ● | ● | ● | ● | ● | ● | ● | ● | × | × |
| | With magnet | ● | ● | × | × | × | × | ● | ● | ● | ● | ● | ● | ● | ● | ● | ● |
| BSAID | Standard | ● | ● | × | × | × | × | ● | × | ● | ● | ● | ● | ● | ● | × | × |
| | With magnet | ● | ● | × | × | × | × | ● | × | ● | ● | ● | ● | ● | ● | ● | ● |
| SAIJ | Standard | ● | ● | × | × | × | × | ● | ● | ● | ● | ● | ● | ● | ● | × | × |
| | With magnet | ● | ● | × | × | × | × | ● | ● | ● | ● | ● | ● | ● | ● | ● | ● |

[Note1] Please refer to P333~336 for knuckle detail.

## Material of accessories

| Accessories / Bore size | Mounting accessories | | | | | | | | | | Knuckle | | | |
|---|---|---|---|---|---|---|---|---|---|---|---|---|---|---|
| | LB | FA | FB | CA | CB | CR | TC | FTC | TCM1 | TCM2 | I | Y | F | U |
| 32~100 | ○ | ● | ● | ◇ | ◇ | ◇ | ◇ | ■ | ■ | ● | □ | □ | □ | □ |
| 125~200 | □ | □ | □ | □ | □ | □ | □ | □ | □ | ● | □ | □ | □ | □ |

●—Aluminum alloy, ■—Cast steel, ○—Low carbon steel, ◇—Nodular cast iron, □—Carbon steel.

## Dimensions

### LB

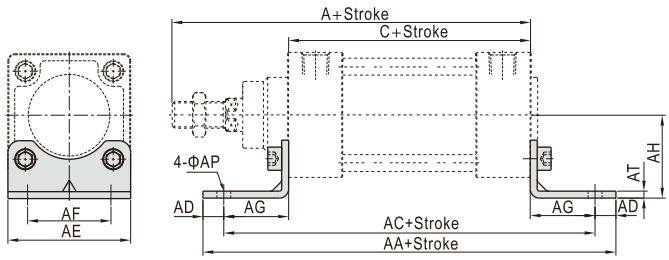


| Bore size\Item | A | C | AA | AC | AD | AE | AF | AG | AH | AP | AT |
|---|---|---|---|---|---|---|---|---|---|---|---|
| 32 | 142 | 94 | 158 | 142 | 8 | 47 | 32 | 24 | 32 | 7 | 3 |
| 40 | 159 | 105 | 179 | 161 | 9 | 53 | 36 | 28 | 36 | 9 | 3 |
| 50 | 175 | 106 | 190 | 170 | 10 | 65 | 45 | 32 | 45 | 9 | 3 |
| 63 | 190 | 121 | 209 | 185 | 12 | 75 | 50 | 32 | 50 | 9 | 3 |
| 80 | 214 | 128 | 248 | 210 | 19 | 95 | 63 | 41 | 63 | 12.5 | 4 |
| 100 | 229 | 138 | 266 | 220 | 19 | 115 | 75 | 41 | 71 | 14.5 | 4 |
| 125 | 279 | 160 | 290 | 250 | 20 | 140 | 90 | 45 | 90 | 16.5 | 8 |
| 160 | 332 | 180 | 340 | 300 | 20 | 180 | 115 | 60 | 115 | 18.5 | 8 |
| 200 | 347 | 180 | 380 | 320 | 30 | 220 | 135 | 70 | 135 | 24 | 9 |

### CA

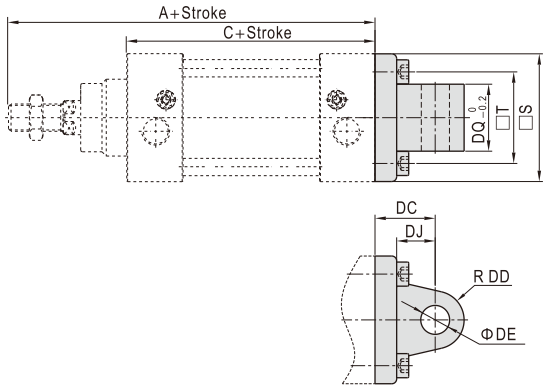


| Bore size\Item | A | C | S | T | DC | DD | DE | DJ | DQ |
|---|---|---|---|---|---|---|---|---|---|
| 32 | 142 | 94 | 47 | 32.5 | 22 | 9 | 10 | 13 | 25.8 |
| 40 | 159 | 105 | 52 | 38 | 25 | 10.5 | 12 | 16 | 27.8 |
| 50 | 175 | 106 | 64 | 46.5 | 27 | 11 | 12 | 17 | 31.7 |
| 63 | 190 | 121 | 74 | 56.5 | 32 | 13.5 | 16 | 22 | 39.7 |
| 80 | 214 | 128 | 94 | 72 | 36 | 14.5 | 16 | 22 | 49.7 |
| 100 | 229 | 138 | 113 | 89 | 41 | 17 | 20 | 27 | 59.7 |
| 125 | 279 | 160 | 139 | 110 | 50 | 22 | 25 | 33 | 69.7 |
| 160 | 332 | 180 | 180 | 140 | 55 | 30 | 30 | 35.5 | 89.7 |
| 200 | 347 | 180 | 220 | 175 | 60 | 30 | 30 | 37 | 89.7 |

### FA/FB

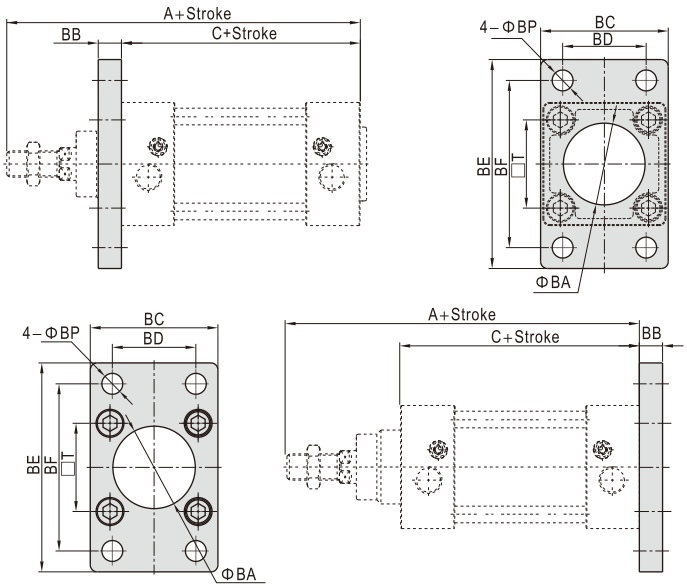


| Bore size\Item | A | C | BA | BB | BC | BD | BE | BF | BP | T |
|---|---|---|---|---|---|---|---|---|---|---|
| 32 | 142 | 94 | 30.5 | 10 | 47 | 32 | 80 | 64 | 7 | 32.5 |
| 40 | 159 | 105 | 35.5 | 10 | 53 | 36 | 90 | 72 | 9 | 38 |
| 50 | 175 | 106 | 40.5 | 12 | 65 | 45 | 108 | 90 | 9 | 46.5 |
| 63 | 190 | 121 | 45.5 | 12 | 75 | 50 | 118 | 100 | 9 | 56.5 |
| 80 | 214 | 128 | 45.5 | 16 | 95 | 63 | 150 | 126 | 12.5 | 72 |
| 100 | 229 | 138 | 55.5 | 16 | 115 | 75 | 176 | 150 | 14.5 | 89 |
| 125 | 279 | 160 | 60.5 | 20 | 139 | 90 | 218 | 180 | 16.5 | 110 |
| 160 | 332 | 180 | 65.5 | 20 | 180 | 115 | 280 | 230 | 18.5 | 140 |
| 200 | 347 | 180 | 75.5 | 25 | 220 | 135 | 320 | 270 | 24 | 175 |

### CB

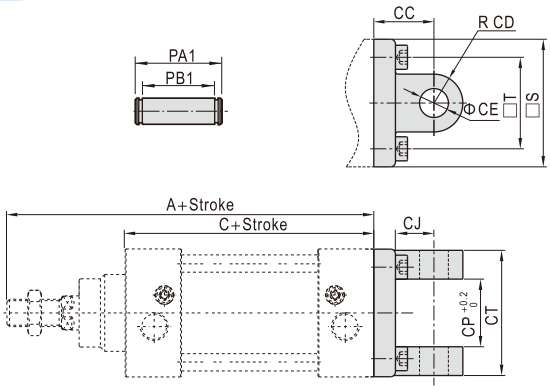


| Bore size\Item | A | C | CC | CD | CE | CJ | CP | CT | PA1 | PB1 | S | T |
|---|---|---|---|---|---|---|---|---|---|---|---|---|
| 32 | 142 | 94 | 22 | 9 | 10 | 13 | 26 | 45 | 51 | 45.5 | 47 | 32.5 |
| 40 | 159 | 105 | 25 | 10.5 | 12 | 16 | 28 | 52 | 59 | 52.5 | 52 | 38 |
| 50 | 175 | 106 | 27 | 11 | 12 | 17 | 32 | 60 | 67 | 60.5 | 64 | 46.5 |
| 63 | 190 | 121 | 32 | 13 | 16 | 22 | 40 | 70 | 77 | 70.5 | 74 | 56.5 |
| 80 | 214 | 128 | 36 | 14 | 16 | 22 | 50 | 90 | 97 | 90.5 | 94 | 72 |
| 100 | 229 | 138 | 41 | 17.5 | 20 | 27 | 60 | 110 | 119 | 110.5 | 113 | 89 |
| 125 | 279 | 160 | 50 | 21.5 | 25 | 33 | 70 | 130 | 139 | 130.5 | 139 | 110 |
| 160 | 332 | 180 | 55 | 30 | 30 | 35.5 | 90 | 170 | 181 | 170.5 | 180 | 140 |
| 200 | 347 | 180 | 60 | 30 | 30 | 36 | 90 | 170 | 181 | 170.5 | 220 | 175 |

### TC

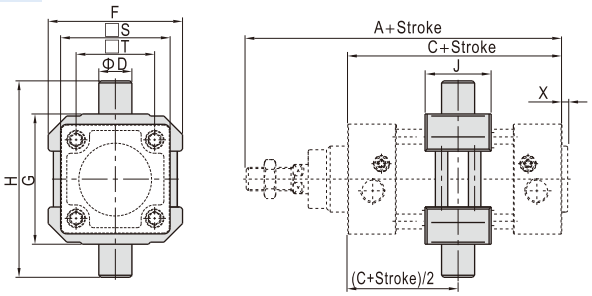


| Bore size\Item | A | C | D | F | G | H | J | S | X | T |
|---|---|---|---|---|---|---|---|---|---|---|
| 32 | 142 | 94 | 12 | 52 | 50 | 74 | 22 | 47 | 3 | 32.5 |
| 40 | 159 | 105 | 16 | 65 | 63 | 95 | 28 | 53 | 3.5 | 38 |
| 50 | 175 | 106 | 16 | 75 | 75 | 107 | 28 | 65 | 3.5 | 46.5 |
| 63 | 190 | 121 | 20 | 90 | 90 | 130 | 30 | 75 | 4 | 56.5 |
| 80 | 214 | 128 | 20 | 112 | 110 | 150 | 32 | 95 | 4 | 72 |
| 100 | 229 | 138 | 25 | 135 | 132 | 182 | 38 | 115 | 4 | 89 |
| 125 | 279 | 160 | 25 | 170 | 160 | 210 | 40 | 140 | 4 | 110 |
| 160 | 332 | 180 | 32 | 210 | 200 | 264 | 50 | 180 | 4 | 140 |
| 200 | 347 | 180 | 32 | 255 | 250 | 314 | 50 | 220 | 5 | 175 |

[Note] The TC accessory has been installed on the barrel of cylinder before it worked off, and the position of the accessories can not be adjusted arbitrarily. If consumer orders the TC solely, he will not install it on the barrel of standard cylinder directly.

### FTC

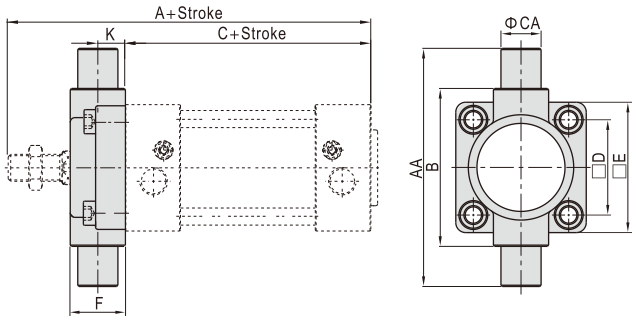


| Bore size\Item | A | C | AA | B | CA | D | E | F | K |
|---|---|---|---|---|---|---|---|---|---|
| 32 | 142 | 94 | 74 | 50 | 12 | 32.5 | 46 | 19 | 10 |
| 40 | 159 | 105 | 95 | 63 | 16 | 38 | 52 | 21 | 10 |
| 50 | 175 | 106 | 107 | 75 | 16 | 46.5 | 64 | 26 | 12 |
| 63 | 190 | 121 | 130 | 90 | 20 | 56.5 | 74 | 28 | 12 |
| 80 | 214 | 128 | 150 | 110 | 20 | 72 | 94 | 31 | 16 |
| 100 | 229 | 138 | 182 | 132 | 25 | 89 | 114 | 35 | 16 |
| 125 | 279 | 160 | 210 | 160 | 25 | 110 | 139 | 43 | 20 |
| 160 | 332 | 180 | 264 | 200 | 32 | 140 | 179 | 56 | 20 |
| 200 | 347 | 180 | 314 | 250 | 32 | 175 | 218 | 64 | 20 |

### TCM1

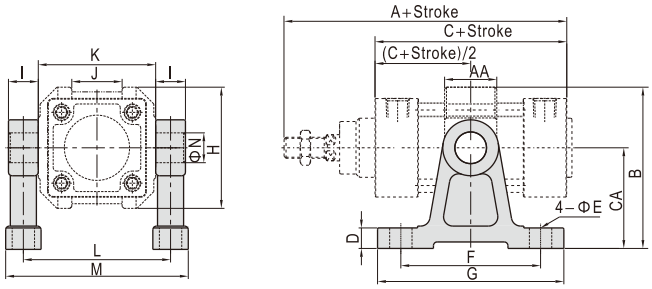


| Bore size\Item | A | C | AA | B | CA | D | E | F | G | H | I | J | K | L | M | N |
|---|---|---|---|---|---|---|---|---|---|---|---|---|---|---|---|---|
| 32 | 142 | 94 | 22 | 66 | 40 | 11 | 9 | 60 | 80 | 52 | 12 | 20 | 50 | 62 | 77 | 12 |
| 40 | 159 | 105 | 28 | 86.5 | 54 | 11 | 12 | 75 | 100 | 65 | 16 | 27 | 63 | 79 | 98 | 16 |
| 50 | 175 | 106 | 28 | 91.5 | 54 | 11 | 12 | 75 | 100 | 75 | 16 | 31 | 75 | 91 | 110 | 16 |
| 63 | 190 | 121 | 30 | 115 | 70 | 11 | 12 | 85 | 110 | 90 | 20 | 42 | 90 | 110 | 133 | 20 |
| 80 | 214 | 128 | 32 | 126 | 70 | 11 | 12 | 85 | 110 | 112 | 20 | 54 | 110 | 130 | 153 | 20 |
| 100 | 229 | 138 | 38 | 157.5 | 90 | 19 | 18 | 115 | 155 | 135 | 25 | 68 | 132 | 157 | 185 | 25 |
| 125 | 279 | 160 | 40 | 175 | 90 | 19 | 18 | 115 | 155 | 170 | 25 | 80 | 160 | 185 | 213 | 25 |
| 160 | 332 | 180 | 50 | 215 | 110 | 24 | 22 | 140 | 190 | 210 | 32 | 100 | 200 | 232 | 267 | 32 |
| 200 | 347 | 180 | 50 | 262.5 | 135 | 27 | 22 | 150 | 200 | 255 | 32 | 125 | 250 | 282 | 317 | 32 |

[Note] The installation position of the accessories can not be adjusted arbitrarily. When TCM1 be used with FTC, please refer to page 22.

### TCM2

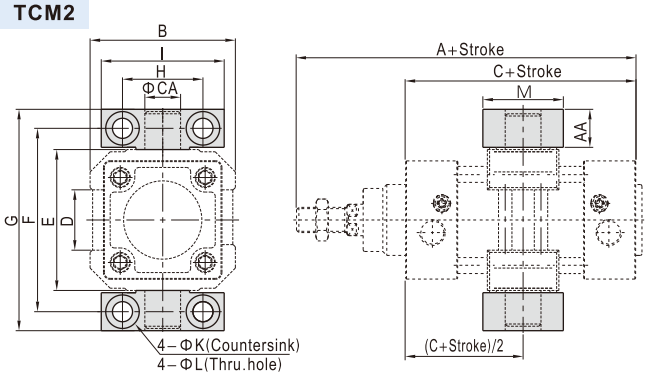


| Bore size\Item | A | AA | B | C | CA | D | E | F | G | H | I | K | L | M |
|---|---|---|---|---|---|---|---|---|---|---|---|---|---|---|
| 32 | 142 | 14 | 52 | 94 | 12 | 20 | 50 | 66 | 80 | 32 | 46 | 11 | 7 | 30 |
| 40 | 159 | 17 | 65 | 105 | 16 | 27 | 63 | 82 | 99 | 36 | 55 | 15 | 9 | 36 |
| 50 | 175 | 17 | 75 | 106 | 16 | 31 | 75 | 94 | 111 | 36 | 55 | 15 | 9 | 36 |
| 63 | 190 | 20.5 | 90 | 121 | 20 | 42 | 90 | 113.5 | 134 | 42 | 65 | 18 | 11 | 40 |
| 80 | 214 | 20.5 | 112 | 128 | 20 | 54 | 110 | 133.5 | 154 | 42 | 65 | 18 | 11 | 40 |
| 100 | 229 | 24.5 | 135 | 138 | 25 | 68 | 132 | 159.5 | 184 | 50 | 75 | 20 | 14 | 50 |
| 125 | 279 | 24.5 | 170 | 160 | 25 | 80 | 160 | 187.5 | 212 | 50 | 75 | 20 | 14 | 50 |
| 160 | 332 | 30 | 210 | 180 | 32 | 100 | 200 | 234 | 264 | 60 | 92 | 26 | 18 | 60 |
| 200 | 347 | 30 | 255 | 180 | 32 | 125 | 250 | 284 | 314 | 60 | 92 | 26 | 18 | 60 |

[Note] The installation position of the accessories can not be adjusted arbitrarily. When TCM2 be used with FTC, please refer to page 22.

### CR

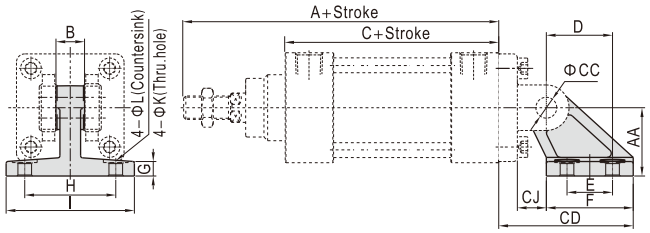


| Bore size\Item | A | AA | B | C | CC | CD | CJ | D | E | F | G | H | I | K | L |
|---|---|---|---|---|---|---|---|---|---|---|---|---|---|---|---|
| 32 | 142 | 32 | 26 | 94 | 10 | 50 | 10 | 21 | 18 | 31 | 8 | 38 | 51 | 6.6 | - |
| 40 | 159 | 36 | 28 | 105 | 12 | 56 | 12 | 24 | 22 | 35 | 10 | 41 | 54 | 6.6 | - |
| 50 | 175 | 45 | 32 | 106 | 12 | 68 | 13 | 33 | 30 | 45 | 12 | 50 | 65 | 9 | - |
| 63 | 190 | 50 | 40 | 121 | 16 | 77 | 17 | 37 | 35 | 50 | 12 | 52 | 67 | 9 | - |
| 80 | 214 | 63 | 50 | 128 | 16 | 93 | 19 | 47 | 40 | 60 | 14 | 66 | 86 | 11 | 18 |
| 100 | 229 | 71 | 60 | 138 | 20 | 106 | 22 | 55 | 50 | 70 | 15 | 76 | 96 | 11 | 18 |
| 125 | 279 | 90 | 70 | 160 | 25 | 135 | 26 | 70 | 60 | 90 | 20 | 94 | 124 | 14 | 20 |
| 160 | 332 | 115 | 90 | 180 | 30 | 171 | 25 | 97 | 88 | 126 | 25 | 118 | 156 | 14 | 20 |
| 200 | 347 | 135 | 90 | 180 | 30 | 185 | 31 | 105 | 90 | 130 | 30 | 122 | 162 | 18 | 26 |

[Note] CR can't be used alone, it must be used with CB.